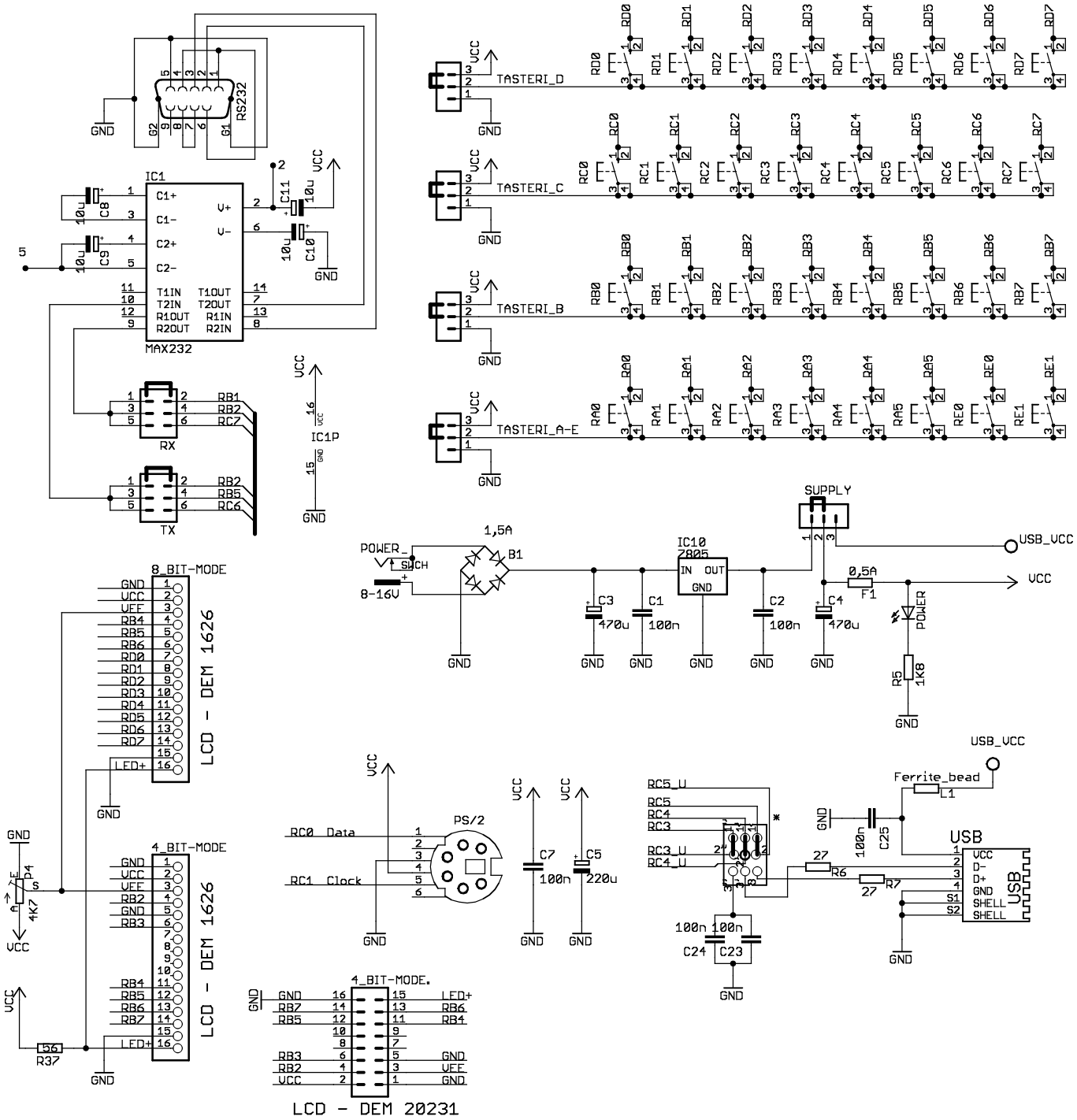
RS232
IC1
MAX232
C1+
C1-
C2+
C2-
V+
V-
T1IN
T2IN
R1OUT
R2OUT
T1OUT
T2OUT
R1IN
R2IN
C8
C9
C10
C11
10u
VCC
GND
IC1P
RX
TX
RB1
RB2
RC7
RB5
RC6
TASTERI_D
TASTERI_C
TASTERI_B
TASTERI_A-E
RD0
RD1
RD2
RD3
RD4
RD5
RD6
RD7
RC0
RC1
RC2
RC3
RC4
RC5
RC6
RC7
RB0
RB1
RB2
RB3
RB4
RB5
RB6
RB7
RA0
RA1
RA2
RA3
RA4
RA5
RE0
RE1
SUPPLY
POWER
SWCH
8-16V
1,5A
B1
IC10
7805
IN
OUT
GND
C3
470u
C1
100n
C2
100n
C4
470u
0,5A
F1
USB_VCC
VCC
POWER
R5
1K8
8_BIT-MODE
LCD - DEM 1626
GND
VCC
VEE
LED+
4_BIT-MODE
P4
4K7
R37
136
PS/2
RC0 Data
RC1 Clock
C7
100n
C5
220u
RC5_U
RC5
RC4
RC3
RC3_U
RC4_U
R6
R7
27
C24
C23
Ferrite_bead
L1
C25
USB
D-
D+
S1
S2
SHELL
LCD - DEM 20231

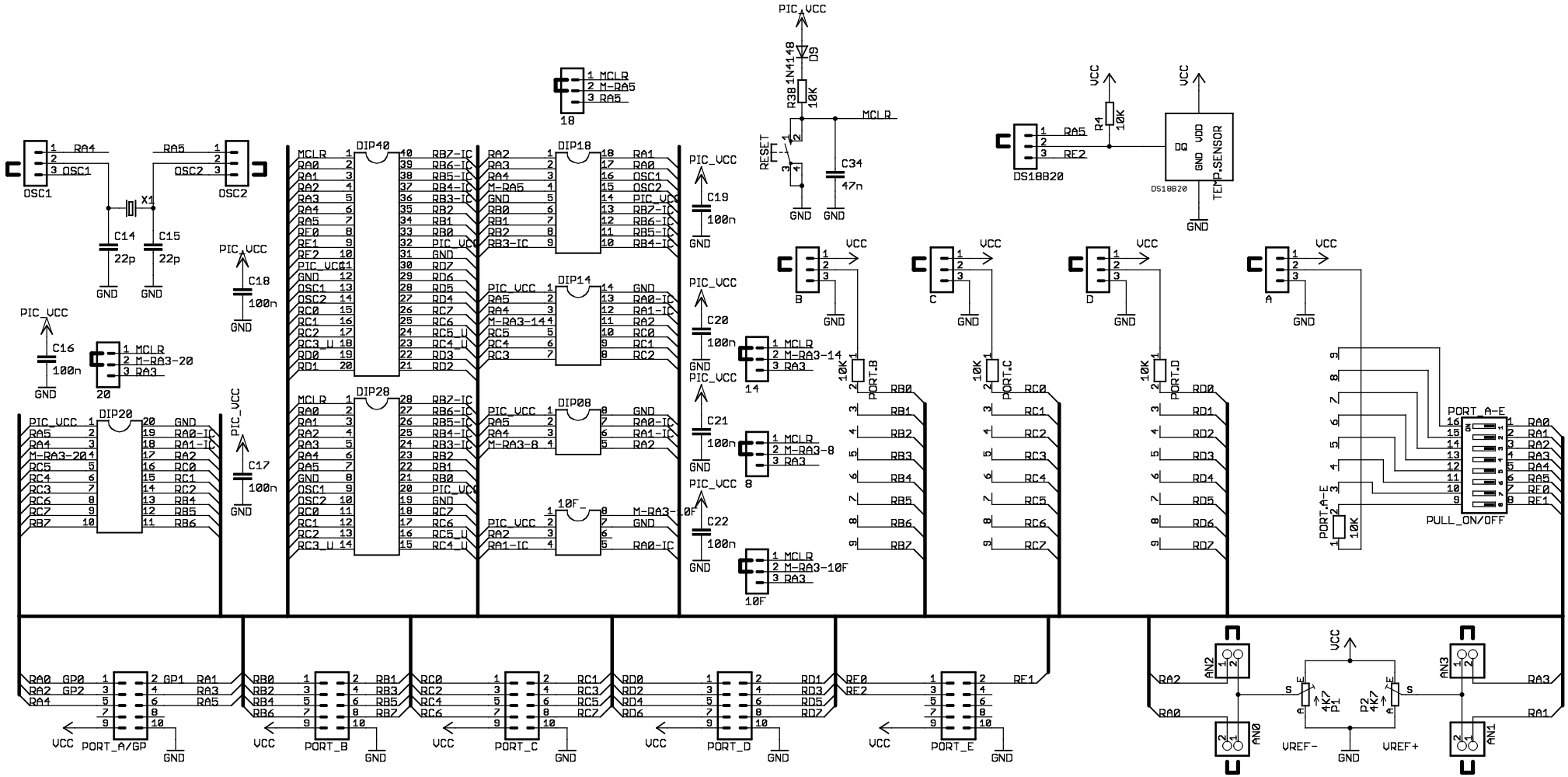
OSC1
OSC2
X1
C14 22p
C15 22p
C16 100n
C17 100n
C18 100n
C19 100n
C20 100n
C21 100n
C22 100n
PIC_VCC
GND
VCC
DIP20
DIP40
DIP28
DIP18
DIP14
DIP08
10F
MCLR
M-RA5
RA5
M-RA3-20
RA3
M-RA3-14
M-RA3-8
M-RA3-10F
RESET
R3 10K
D9 1N4148
C34 47n
DS18B20
R4 10K
TEMP.SENSOR
PORT_A-E
PULL_ON/OFF
PORT_A/GP
PORT_B
PORT_C
PORT_D
PORT_E
AN0
AN1
AN2
AN3
VREF-
VREF+
P1 4K7
P2 4K7

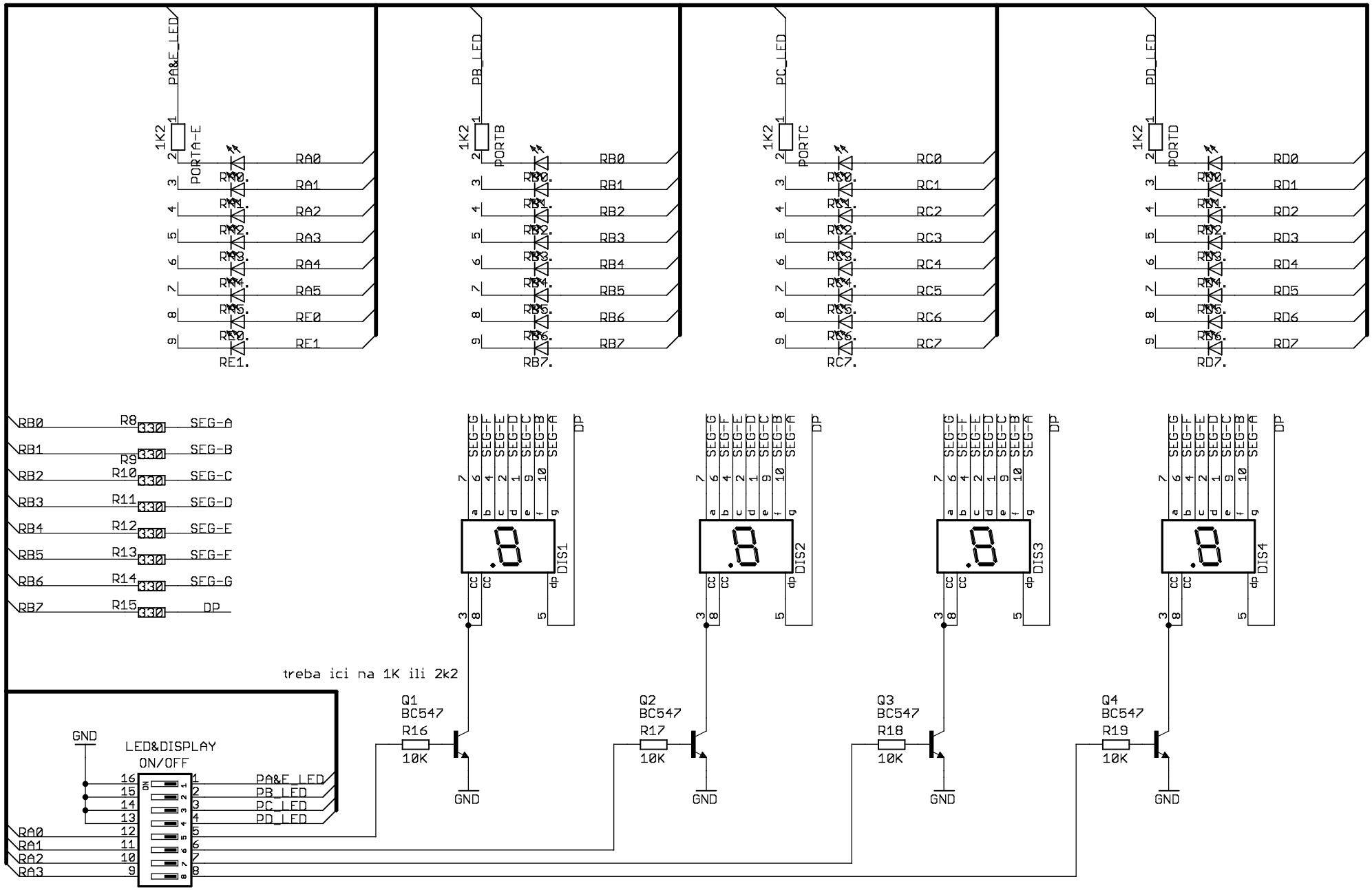
PA&F_LED
PB_LED
PC_LED
PD_LED
1K2
PORTA-E
PORTB
PORTC
PORTD
RA0
RA1
RA2
RA3
RA4
RA5
RE0
RE1
RB0
RB1
RB2
RB3
RB4
RB5
RB6
RB7
RC0
RC1
RC2
RC3
RC4
RC5
RC6
RC7
RD0
RD1
RD2
RD3
RD4
RD5
RD6
RD7
R8
R9
R10
R11
R12
R13
R14
R15
330
SEG-A
SEG-B
SEG-C
SEG-D
SEG-E
SEG-F
SEG-G
DP
DIS1
DIS2
DIS3
DIS4
treba ici na 1K ili 2k2
Q1
BC547
R16
10K
Q2
BC547
R17
10K
Q3
BC547
R18
10K
Q4
BC547
R19
10K
GND
LED&DISPLAY
ON/OFF

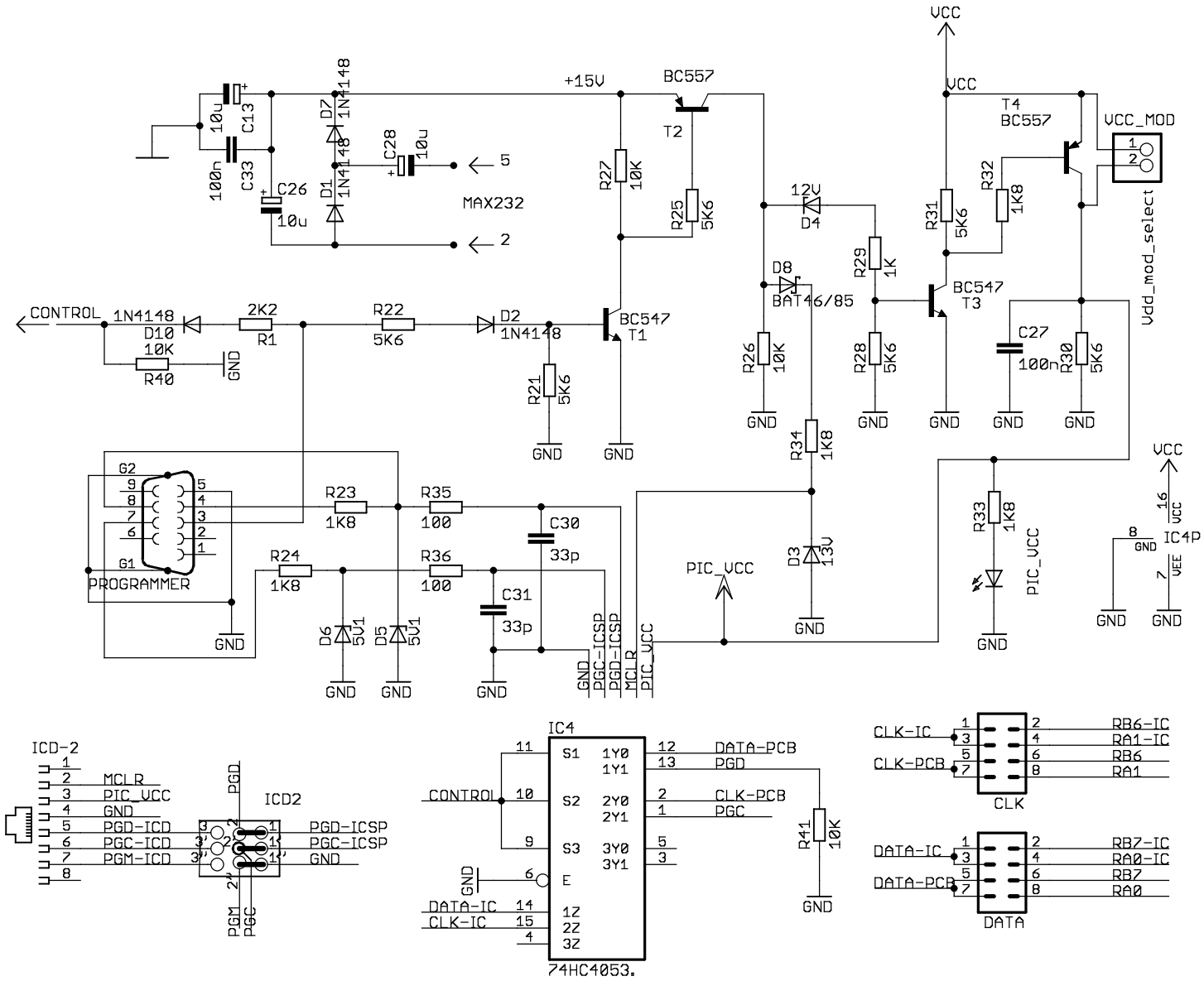
VCC
+15V
BC557
T2
C13
10u
C33
100n
C26
10u
D7
1N4148
D1
1N4148
C28
10u
MAX232
5
2
R27
10K
R25
5K6
12V
D4
D8
BAT46/85
R29
1K
R31
5K6
R32
1K8
T4
BC557
VCC_MOD
Vdd_mod_select
BC547
T3
C27
100n
R30
5K6
R26
10K
R28
5K6
R34
1K8
D3
13V
R33
1K8
PIC_VCC
IC4p
16
VCC
8
GND
7
VEE
GND
CONTROL
1N4148
D10
2K2
R1
R22
5K6
D2
1N4148
BC547
T1
R21
5K6
10K
R40
PROGRAMMER
G2
G1
R23
1K8
R35
100
C30
33p
R24
1K8
R36
100
C31
33p
D6
5V1
D5
5V1
PGC-ICSP
PGD-ICSP
MCLR
PIC_VCC
ICD-2
MCLR
PIC_VCC
GND
PGD-ICD
PGC-ICD
PGM-ICD
ICD2
PGD
PGM
PGC
PGD-ICSP
PGC-ICSP
GND
IC4
S1
S2
S3
E
1Y0
1Y1
2Y0
2Y1
3Y0
3Y1
1Z
2Z
3Z
DATA-PCB
PGD
CLK-PCB
PGC
DATA-IC
CLK-IC
74HC4053.
R41
10K
CLK-IC
CLK-PCB
CLK
RB6-IC
RA1-IC
RB6
RA1
DATA-IC
DATA-PCB
DATA
RB7-IC
RA0-IC
RB7
RA0